## 51 mm (2") Pump Maximum Flow Rate: 624 lpm (165 gpm)

P800 PLASTIC

## PUMP DATA

***Specifications:***

Ship Weight.....Polypropylene 32 kg (70 lb)
PVDF 45 kg (99 lb)
Air Inlet..... 13 mm (1/2")
Liquid Inlet..... 51 mm (2")
Liquid Outlet..... 51 mm (2")

## DIMENSIONAL DRAWINGS

### P800 Polypropylene

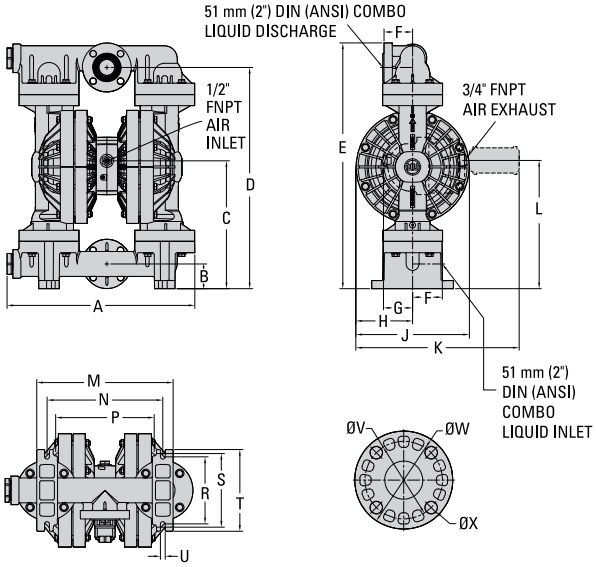


**DIMENSIONS**

| ITEM | METRIC (mm) | STANDARD (inch) |
|---|---|---|
| A | 584 | 23.0 |
| B | 77 | 3.0 |
| C | 396 | 15.6 |
| D | 688 | 27.1 |
| E | 765 | 30.1 |
| F | 89 | 3.5 |
| G | 91 | 3.6 |
| H | 175 | 6.9 |
| J | 353 | 13.9 |
| K | 508 | 20.0 |
| L | 399 | 15.7 |
| M | 423 | 16.7 |
| N | 360 | 14.2 |
| P | 306 | 12.1 |
| R | 208 | 8.2 |
| S | 226 | 8.9 |
| T | 254 | 10.0 |
| U | 15 | 0.6 |
| **DIN / ANSI COMBO** | | |
| V | 121 DIA. | 4.8 DIA. |
| W | 152 DIA. | 6.0 DIA. |
| X | 21 DIA. | 0.8 DIA. |

LW0332 REV. A

*Click button to view Dimensional Drawing* ➔ P800 POLYPROPYLENE CENTER-PORTED | P800 POLYPROPYLENE SIDE-PORTED

### P800 PVDF

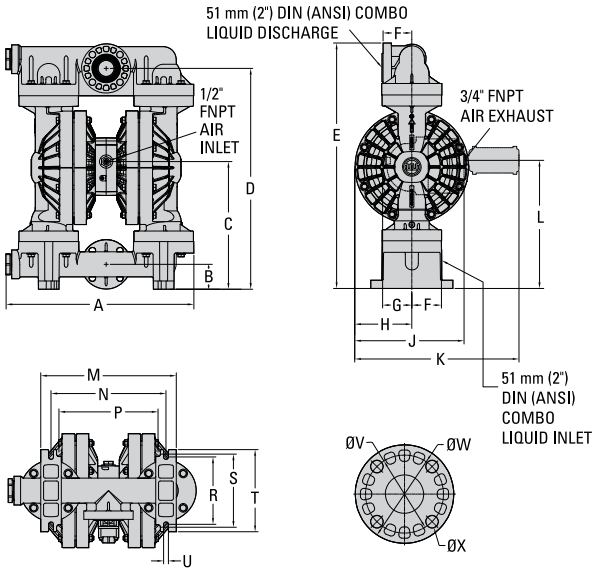


**DIMENSIONS**

| ITEM | METRIC (mm) | STANDARD (inch) |
|---|---|---|
| A | 582 | 22.9 |
| B | 77 | 3.0 |
| C | 394 | 15.5 |
| D | 683 | 26.9 |
| E | 759 | 29.9 |
| F | 89 | 3.5 |
| G | 91 | 3.6 |
| H | 175 | 6.9 |
| J | 358 | 13.3 |
| K | 508 | 20.0 |
| L | 396 | 15.6 |
| M | 419 | 16.5 |
| N | 356 | 14.0 |
| P | 306 | 12.1 |
| R | 208 | 8.2 |
| S | 226 | 8.9 |
| T | 254 | 10.0 |
| U | 15 | 0.6 |
| **DIN / ANSI COMBO** | | |
| V | 121 DIA. | 4.8 DIA. |
| W | 152 DIA. | 6.0 DIA. |
| X | 21 DIA. | 0.8 DIA. |

LW0333 REV. A

*Click button to view Dimensional Drawing* ➔ P800 PVDF CENTER-PORTED | P800 PVDF SIDE-PORTED

WILDEN®
22069 Van Buren Street
Grand Terrace, CA 92313-5607 USA
O: +1 (909) 422-1730 F: +1 (909) 783-3440
www.wildenpump.com

## PERFORMANCE

### P800 PLASTIC RUBBER-FITTED

Max. Flow Rate..... 624 lpm (165 gpm)
Max. Inlet Pressure ..... 8.6 bar (125 psig)
Max. Solids Passage.....6.4 mm (1/4")
Max. Suction Lift..... 6.2 m Dry (20.4')
8.7 m Wet (28.4')

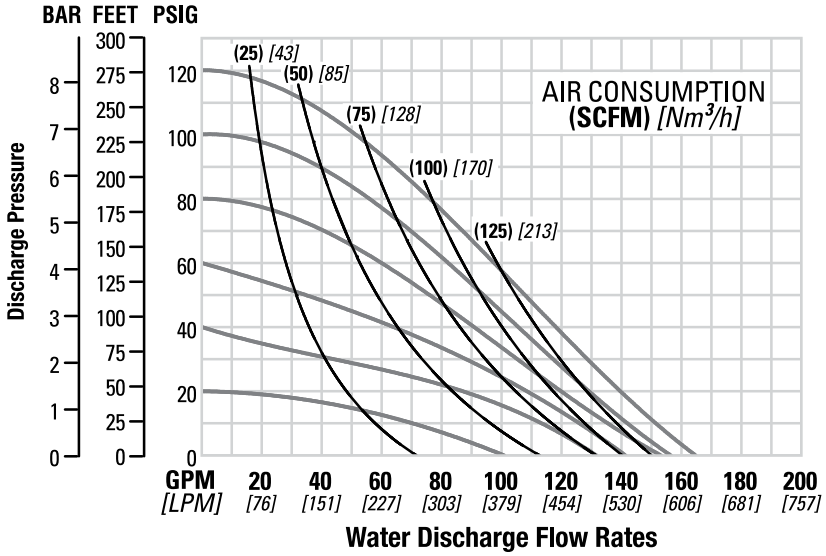


*Click button to view Performance Curve* → RUBBER-FITTED | TPE-FITTED

### P800 PLASTIC REDUCED-STROKE PTFE-FITTED

Max. Flow Rate..... 504 lpm (133 gpm)
Max. Inlet Pressure ..... 8.6 bar (125 psig)
Max. Solids Passage.....6.4 mm (1/4")
Max. Suction Lift..... 4.2 m Dry (13.6')
8.7 m Wet (28.4')

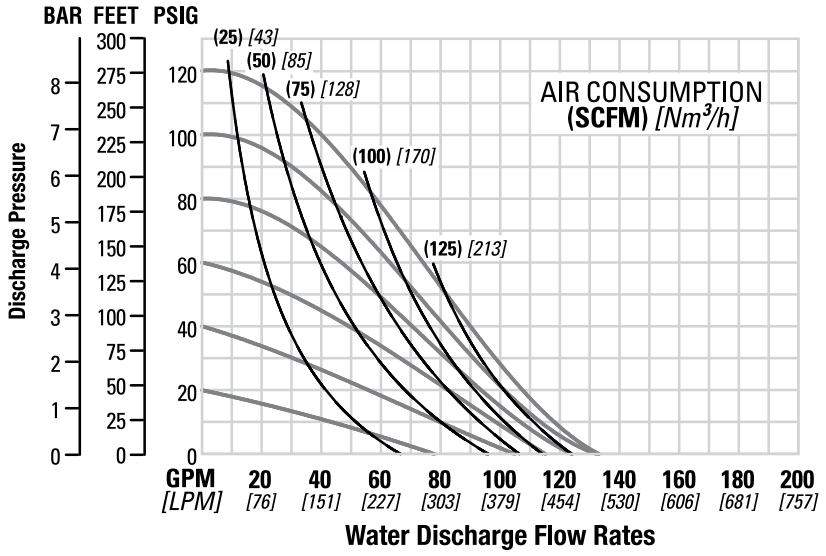


*Click button to view Performance Curve* → REDUCED-STROKE PTFE-FITTED | FULL-STROKE PTFE-FITTED

WILDEN®
22069 Van Buren Street
Grand Terrace, CA 92313-5607 USA
O: +1 (909) 422-1730 F: +1 (909) 783-3440
www.wildenpump.com